TXD series

Vacuum Gripper-Light Load Type

Features

◇ High strength and light weight due to high quality aluminum profile structure.
◇ Short respond time due to built-in high flow vacuum pump.
◇ Optional built-in non-return valve structure,can handle variety of specifications of product.
◇ The adsorption surface adopts sponge/suction cup structure.

Application

◇ 3C ◇ Metal sheet ◇ Sorting ◇ Package

How to order

TXD 80 R - H - V
① ② ③ ④ ⑤

① Series	② Dimension	③ Adsorbing surface type		④ Specifications	⑤ Non -return valve
TXD	80	R	- Rectangular sponge	H - Vacuum level -95 kPa	Nil - Without non-return valve
	100	S	- Circular Sponge	L - Vacuum level -75kPa	V - With non-return valve
	120	B3N/B5N/B7N	- Circular NBR suction cup		
		B3WS/B5WS/B7WS	- Circular white silicone suction cup		

Selection

Model/Size	R	R-V	S	S-V	B3/B5/B7
TXD80	●	○	●	○	○
TXD100	●	○	●	○	-
TXD120	●	○	●	○	-

◇ Note : "●"default, in stock: "○"-selective, no stock."-"unavailable.

Technical parameters

Model	Air supply pressure(bar)	Max.vacuum flow(NL/min)	Air consumption (NL/min)	Max. vacuum level(-kPa)	Weight (kg)	Recommended hose diameter of air supply port(mm)
TXD80R-L	6.0	180	120	75	0.55	ϕ8
TXD80R-L-V	6.0	180	120	75	0.65	ϕ8
TXD80R-H	5.0	170	125	95	0.55	ϕ8
TXD80R-H-V	5.0	170	125	95	0.65	ϕ8
TXD80S-L	6.0	180	120	75	0.5	ϕ8
TXD80S-L-V	6.0	180	120	75	0.6	ϕ8
TXD80S-H	5.0	170	125	95	0.5	ϕ8
TXD80S-H-V	5.0	170	125	95	0.6	ϕ8
TXD80B-L	6.0	180	120	75	0.65	ϕ8
TXD80B-H	5.0	170	125	95	0.7	ϕ8

◇Note: Testing vacuum level -60kPa,the data of suction force as above are figured out in the condition that the vacuum gripper is full covered by a rigid airtight workpiece, and without including safety factor,working temperature-20~80°C.

TXD series

Vacuum Gipper-Light Load Type

Model	Air supply pressure(bar)	Max.vacuum flow(NL/min)	Air consumption (NL/min)	Max. vacuum level(-kPa)	Weight (kg)	Recommended hose diameter of air supply port(mm)
TXD100R-L	6.0	180	120	75	0.65	ϕ8
TXD100R-L-V	6.0	180	120	75	0.7	ϕ8
TXD100R-H	5.0	170	125	95	0.65	ϕ8
TXD100R-H-V	5.0	170	125	95	0.7	ϕ8
TXD100S-L	6.0	180	120	75	0.6	ϕ8
TXD100S-L-V	6.0	180	120	75	0.65	ϕ8
TXD100S-H	5.0	170	125	95	0.6	ϕ8
TXD100S-H-V	5.0	170	125	95	0.65	ϕ8
TXD120R-L	6.0	180	120	75	0.73	ϕ8
TXD120R-L-V	6.0	180	120	75	0.81	ϕ8
TXD120R-H	5.0	170	125	95	0.73	ϕ8
TXD120R-H-V	5.0	170	125	95	0.81	ϕ8
TXD120S-L	6.0	180	120	75	0.8	ϕ8
TXD120S-L-V	6.0	180	120	75	0.87	ϕ8
TXD120S-H	5.0	170	125	95	0.8	ϕ8
TXD120S-H-V	5.0	170	125	95	0.87	ϕ8

◇ Note: Testing vacuum level -60kPa,the data of suction force as above are figured out in the condition that the vacuum gripper is full covered by a rigid airtight workpiece, and without including safety factor,working temperature-20~80°C.

Dimensions(mm)

S-Circular Sponge

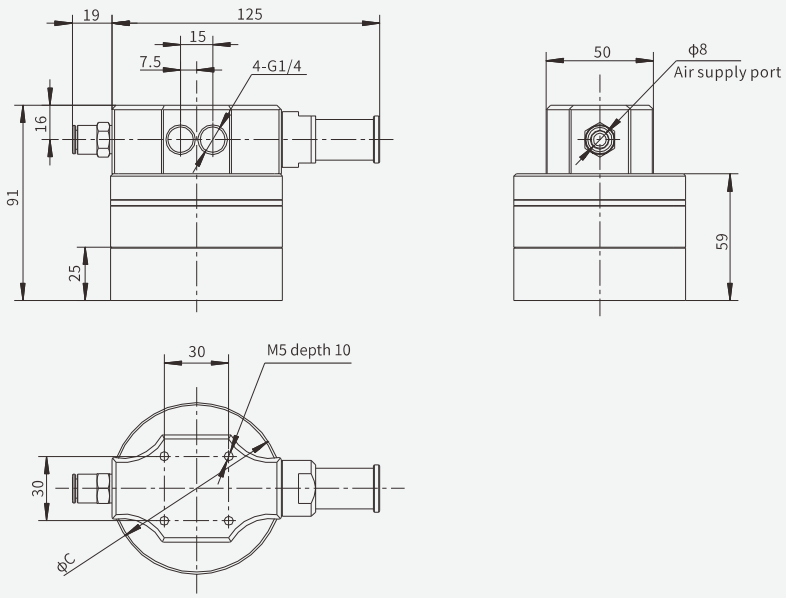

Specification	TXD 80	TXD 100	TXD 120
C	80	100	120

TXD series

Vacuum Gripper-Light Load Type

Dimensions(mm)

R-Rectangular Sponge

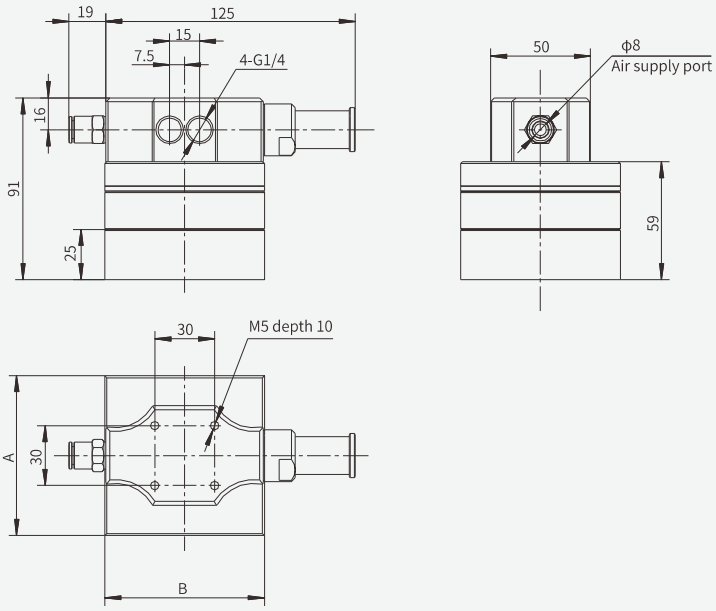

Specification	TXD80	TXD100	TXD120
A	80	100	120
B	80	100	120

80B -Circular suction cup

The corresponding suction cup is as follows:
B3N-SPC3N
B3WS-SPC3WS
B5N-SPC5N
B5WS-SPC5WS
B7N-SPC7N
B7WS-SPC7WS

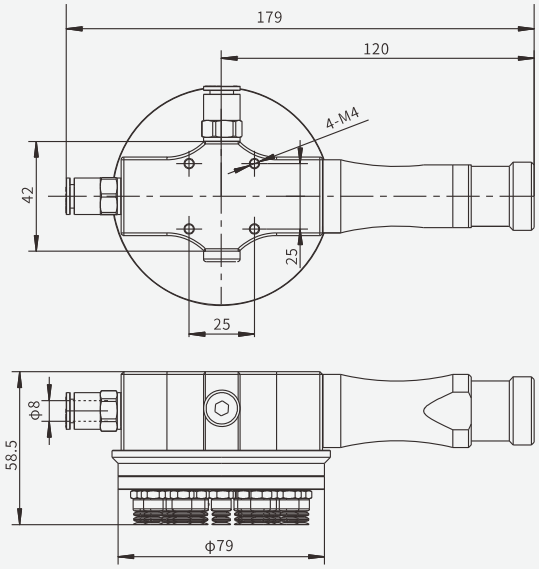

TXD series

Vacuum Gripper-Light Load Type

Spare parts

Vacuum gripper model	Adsorbing surface model	Specification
TXD80R	TXD80RA	ϕ80
TXD80R-V	TXD80RA-V	ϕ80
TXD80S	TXD80SA	80×80
TXD80S-V	TXD80SA-V	80×80
TXD100R	TXD100RA	ϕ100
TXD100R-V	TXD100RA-V	ϕ100
TXD100S	TXD100SA	100×100
TXD100S-V	TXD100SA-V	100×100
TXD120R	TXD120RA	ϕ120
TXD120R-V	TXD120RA-V	ϕ120
TXD120S	TXD120SA	120×120
TXD120S-V	TXD120SA-V	120×120
TXD80B	-	ϕ3/ϕ5/ϕ7